# Amphibio Hydra 2

## NEW FLOATING PUMP

**New floating pump Hydra 2 with a superb new design and the highest performance in its category.**

**Perfect solution for pumping water from natural sources and filling up water tenders.**

Efficient helper for firefighters and wherever a rapid intervention is required (municipal services, forests, buildings or construction companies).

**USE FOR:**

- Filling up water tenders
- Drainage of flooded areas
- Extinguishing fires

*Helping those who help others*

## AMPHIBIO HYDRA 2 PERFORMANCE CURVE

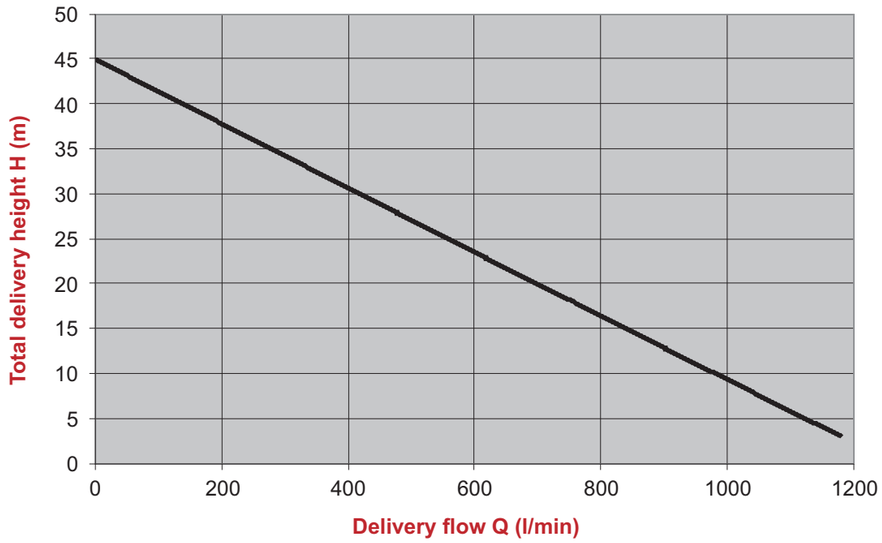


## NEW CONSTRUCTION FOR HIGH PERFORMANCE

Due to the perfectly tuned combination of pressure and flow rate Amphibio Hydra 2 provides such high performance that it allows for the pump to be used for extinguishing fires. Amphibio Hydra 2 provides the highest performance among all pumps in its category.

## INTEGRATED FUEL TANK

The pump is now fitted with a larger fuel tank with volume of 6 L which allows the pump to run for more than 3 hours of continuous operation.

## NEW ERGONOMIC DESIGN

The new superb design allows for better ergonomics of the float and introduces four handles for easier manipulation. The shape and compact dimensions of the float enable better stowage and higher stability on water surface.

# ZABRANSKY HIGH TECHNOLOGY

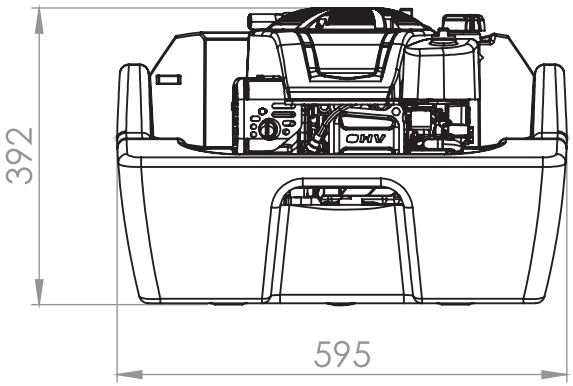


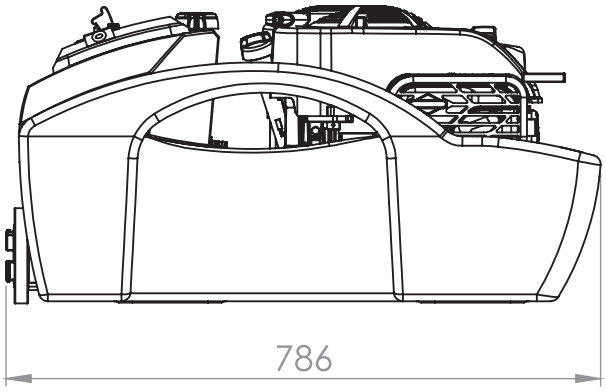


| PARAMETERS | |
|---|---|
| Nominal max. output | 1180 LPM |
| Nominal max. pressure | 4,5 bar |
| Pumping head | Up to 45 m of water column |
| Outlet diameter | 65 mm / B75 |
| Min. suction depth | 15 mm |
| Engine | Briggs and Stratton |
| Starting system | Manual |
| Tank capacity | 6 L |
| Operation time at full fuel tank | More than 3 hours |
| Weight | Dry 27 kg/ Operation 32 kg |
| Dimensions | 786 x 595 x 392 mm |

**Performance of Amphibio Hydra 2 officially certified**